WireSert Locking

ZONE	REV.	REVISIONS DESCRIPTION	DATE	APPROVED

Diameter Thread Pitch

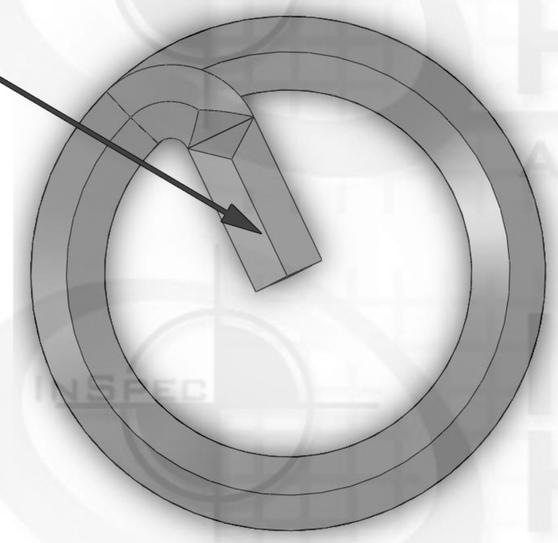

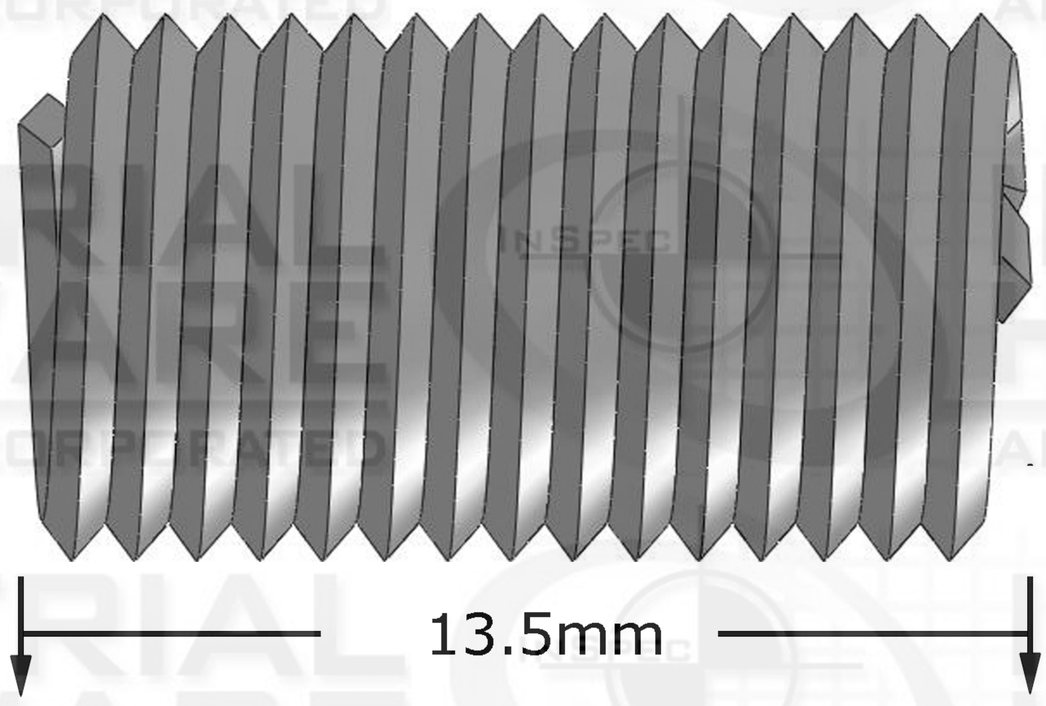

Suggested Drill Bit Size

0.3750 (3/8)

PROPRIETARY AND CONFIDENTIAL

THIS DRAWING AND IT'S CONTENT IS THE SOLE PROPERTY OF INDUSTRIAL HARDWARE & SPECIALTIES,INC.. ANY REPRODUCTION IN PART OR AS A WHOLE WITHOUT THE WRITTEN PERMISSION OF INDUSTRIAL HARDWARE & SPECIALTIES,INC. IS STRICTLY PROHIBITED.

NEXT ASSY	USED ON
APPLICATION	

TH. STANDARD: ISO Metric
ACRONYM: ISO
ROTATION: Right-Hand

MATERIAL FINISH
Stainless Steel 18-8

PART NUMBER
35L7C-C8M2-B90H15-34

DO NOT SCALE DRAWING

	NAME	DATE
DRAWN		
CHECKED		
ENG APPR.		
MFG APPR.		
Q.A.		

COMMENTS:

INDUSTRIAL HARDWARE AND SPECIALTIES INCORPORATED

17-B KENTUCKY AVENUE
PATERSON, NEW JERSEY 07503
TEL: 973-684-4010 FAX: 973-684-3095
email: TechSupport@industrialhardware.com
www.industrialhardware.com

SIZE	DWG. NO.	REV.
A		
SCALE:1:8	WEIGHT: 0.43	SHEET 1 OF 1